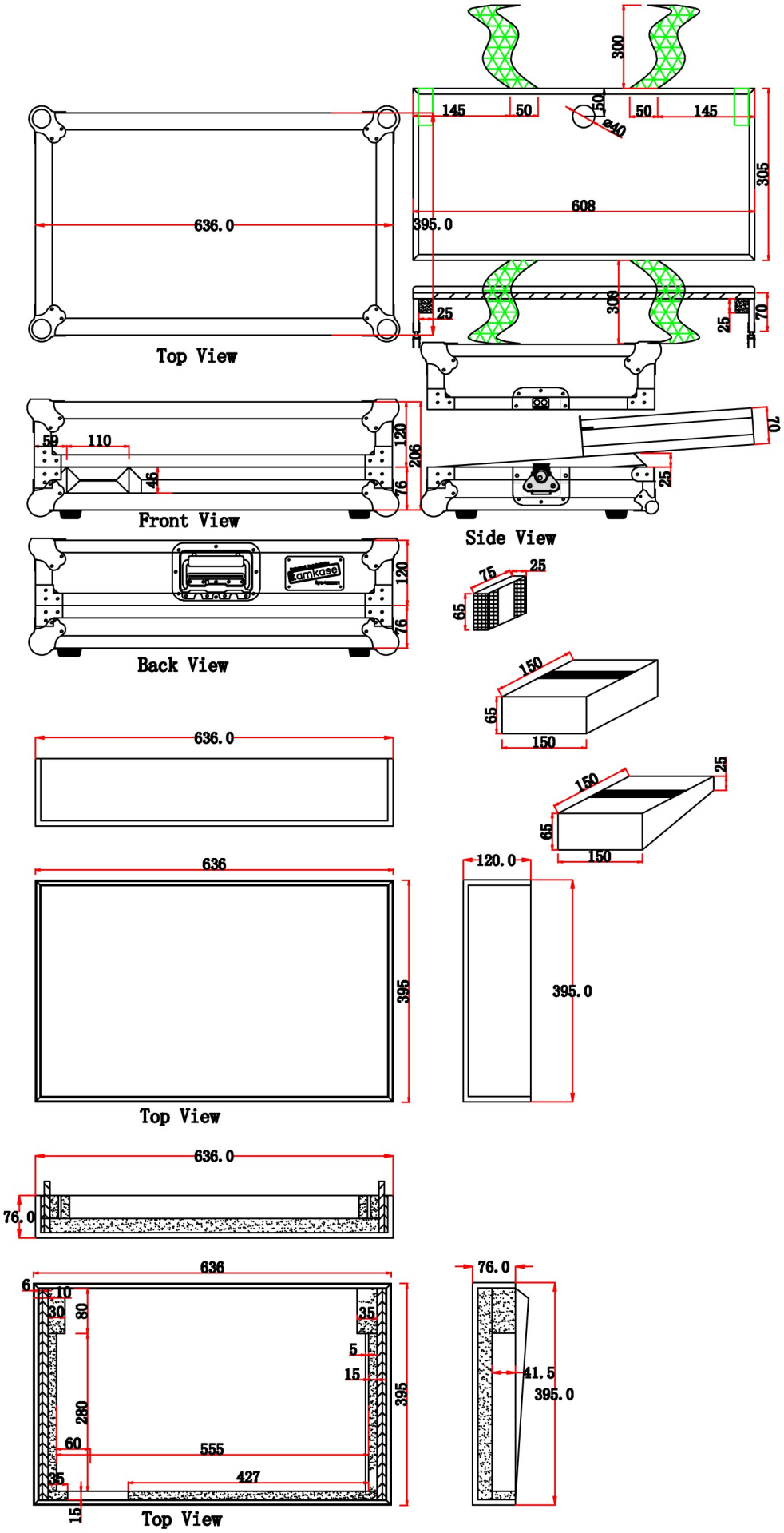
300
145
50
50
50
145
e40
305
608
636.0
395.0
25
306
25
70
Top View
110
120
206
46
76
70
25
Front View
Side View
120
76
Back View
75
25
65
150
65
150
636.0
150
25
65
150
636
120.0
395
395.0
Top View
636.0
76.0
636
6
10
30
80
35
5
15
395
280
60
555
427
35
15
Top View
76.0
41.5
395.0